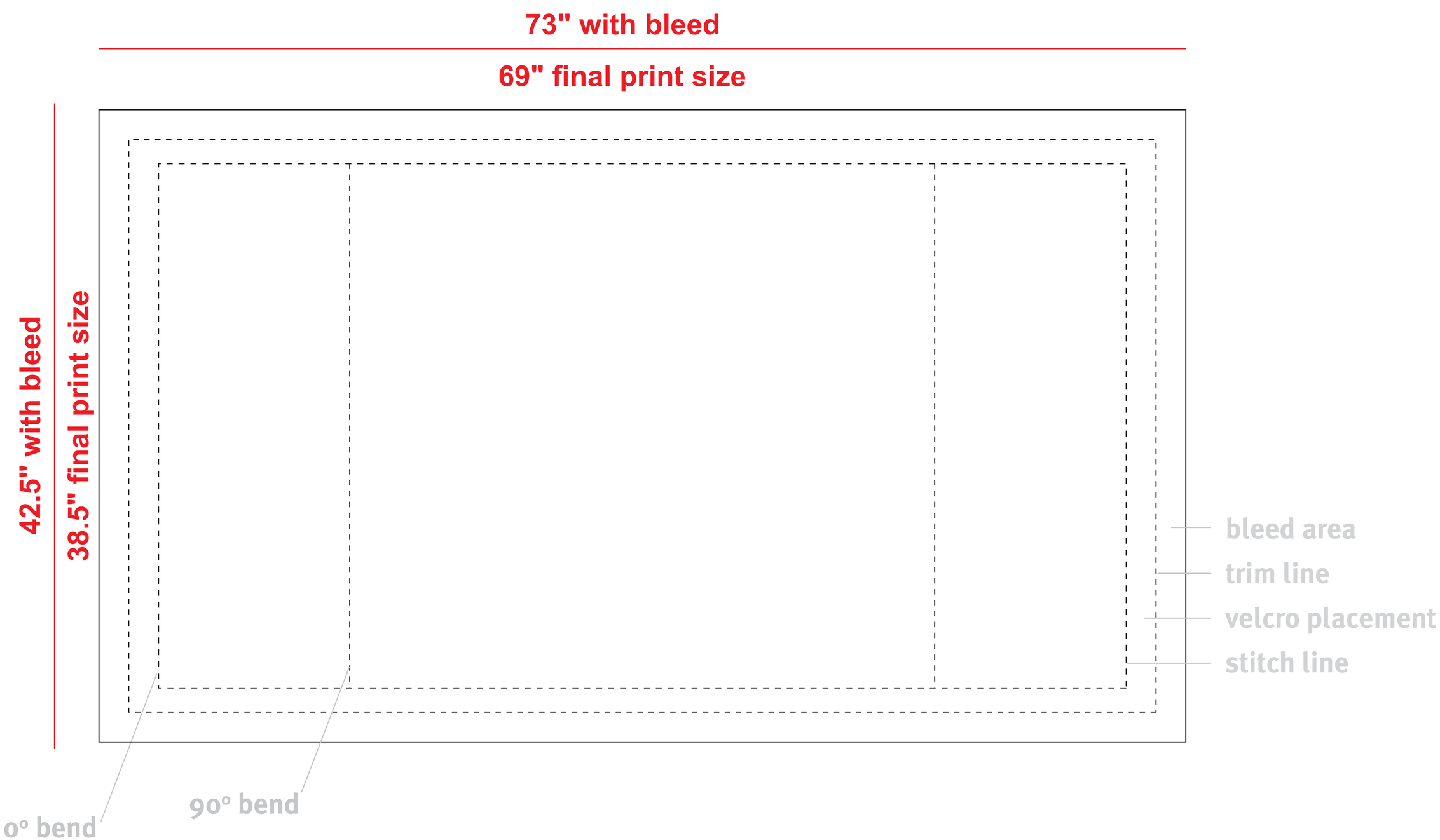Fabric Counter Template